Innovative Chafe Protection Solutions and Hardware for High-Performance Ropes

samson®

THE STRONGEST NAME IN ROPE

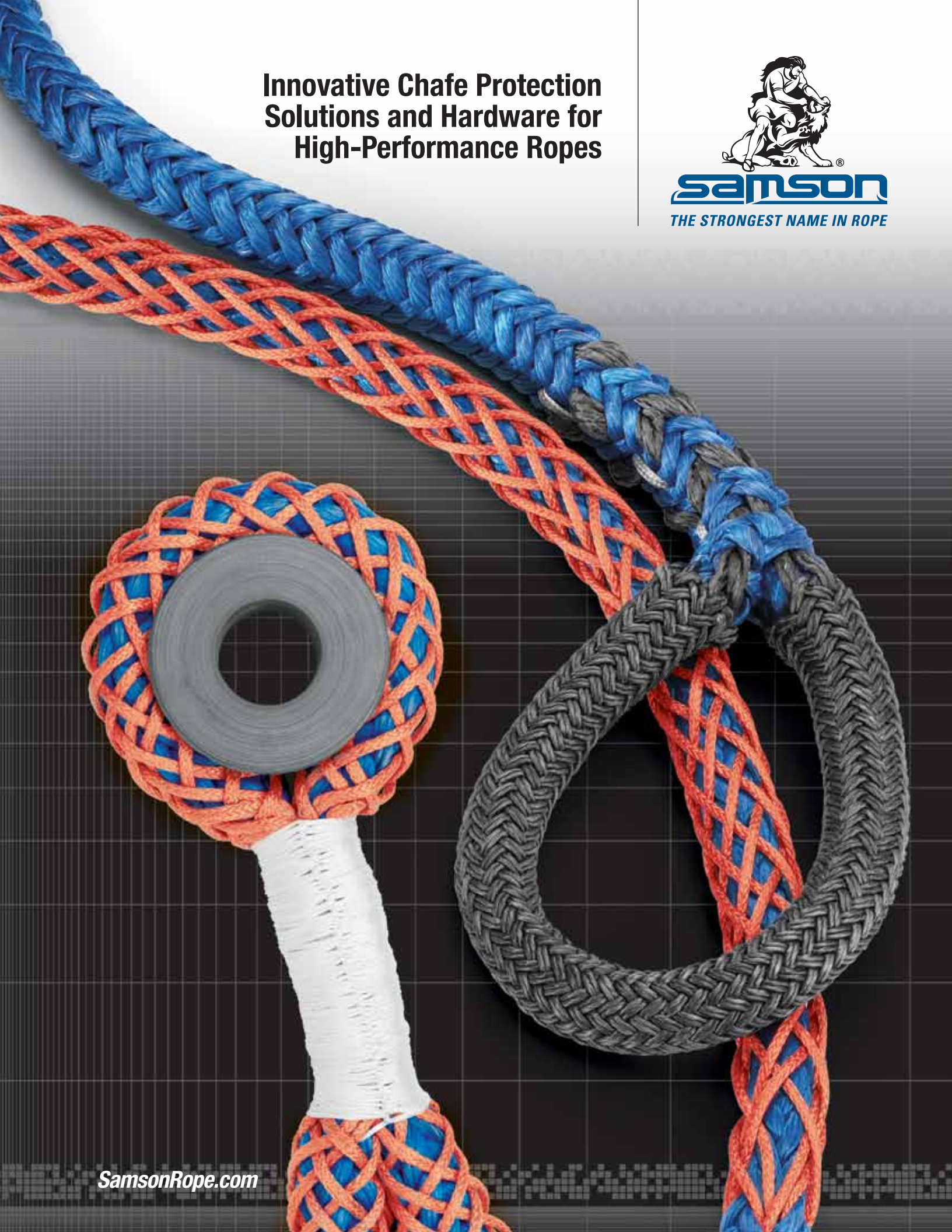

SamsonRope.com

Innovative Chafe Protection for High-Performance Ropes

Samson has the most innovative chafe solutions to extend the life of your synthetic ropes

Wherever chafing can affect performance, Samson chafe-protection solutions will ensure a safe and successful operation.

Samson high-performance synthetic ropes have been engineered to provide ease of handling, extreme strength, and long service life. Dyneema® fiber, a major component in many of Samson's high-performance ropes, is extremely cut and abrasion resistant. While properly designed and engineered ropes take maximum advantage of this resistance, in the real world environment of the commercial marine industry, protecting ropes from abrasion and cutting significantly increases service life.

Samson has committed substantial research and development resources to designing a line of chafe protection products that maximize the service life of our ropes. The result is a family of products perfectly suited to combat the causes of cutting and abrasion encountered in offshore, mooring, and tug operations. Because each application has its own characteristic requirements, Samson has developed a full range of options to protect your investment and ensure the longest service life for your working ropes. All chafe options can be factory-installed on your ropes prior to shipment, or they are available in bulk for field installation.

Samson chafe protection products are perfectly suited to combat the causes of cutting and abrasion encountered in offshore, mooring, and tug operations.

When replacing wire ropes with synthetics, it is important to prepare or repair the surfaces of deck equipment damaged or scored by abrasion. Chocks, fairleads, bollards, bitts, or other hardware contacting the rope need to be smooth and free of rust to ensure your ropes' longest life. A Samson representative is available to visit your vessel to assess the hardware condition and advise on proper preparation to maximize the service life of your ropes. That's the Samson Advantage: high-performance, reliable products, innovative engineering, and the best customer service in the industry.

ROPE CLASSIFICATION

We have divided our product offering into two classes of ropes.

CLASS II

Class II ropes are produced with high-modulus fibers that impart the strength and stretch characteristics to ropes with tenacities greater than 15 grams/denier (gpd) and a total stretch at break of less than 6%.

Typical Class II ropes are produced with: HMPE (Dyneema® or Spectra®), Aramid (Technora® or Kevlar®), LCP (Vectran®), PBO (Zylon®) and Carbon fibers.

CLASS I

Class I ropes are produced with non high-modulus fibers that impart the strength and stretch characteristics to ropes with tenacities of 15 grams/denier (gpd) or less and a total stretch at break of 6% or greater.

Class I ropes are produced with traditional fibers such as: Olefin (polypropylene or polyethylene), nylon, and polyester.

UNDERSTANDING ABRASION

There are two types of abrasion: internal abrasion caused by the relative movement of internal and external yarns, and external abrasion caused by contact with external surfaces. An unprotected rope moving over a rough surface, such as a poorly maintained chock can be subjected to both. Upon inspection, it's easy to see that the external strands are abraded by a rough surface: often, fibers can be left behind on the surface that caused the abrasion, and the surface of the rope readily shows abraded yarns.

The same rough surfaces can also cause internal abrasion due to the movement of the internal strands relative to each other. When the rope's surface strands pass over rough surfaces, they are slowed relative to the strands next to them, causing friction. Heat is created from friction—and heat is among the biggest enemies of synthetic ropes.

In the real-world environment of the commercial marine industry, protecting ropes from abrasion and cutting significantly increases service life.

Fortunately, the effects of both types of abrasion are easily mitigated. Proper surfacing of hardware is easily addressed. Grinding and smoothing of surfaces prior to the installation of synthetic ropes is standard procedure (guidelines for surface preparation suitable for synthetic ropes are available on the Samson website at ***SamsonRope.com***) and hardware specifically made for use with synthetic ropes is also available.

Because lines are often subjected to surfaces not under your control, like mooring bollards roughened and scored by wire ropes, proper chafe gear is essential. Table 1 illustrates two ropes: one with chafe protection and one without. Both ropes were exposed to identical working conditions but have different outcomes. The rope with chafe protection performed better, proven by the higher percentage of average residual strength. This is because properly designed chafe gear acts as a sacrificial layer for external abrasion from rough surfaces, and also reduces internal abrasion by keeping relative fiber movement at the surface of the rope.

Samson has designed chafe gear specifically for high-performance ropes, providing a complete line of chafe products to protect working lines in daily use.

External abrasion without protection

External abrasion with protection

Internal abrasion without protection

Internal abrasion with protection

THE PHYSICS OF ABRASION

TABLE 1 Residual strength and safety factor for AmSteel®-Blue with and without chafe protection with similar number of jobs.

	WITH CHAFE PROTECTION	WITHOUT CHAFE PROTECTION
Average Residual Strength *(% Published Min. Break Strength)*	61%	41%
Remaining Safety Factor	3:1	2:1

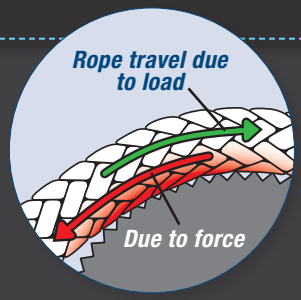

WITHOUT CHAFE GEAR (HMPE ON METAL)

Friction caused by poorly surfaced deck hardware causes both external abrasion to surface strands and abrasion to internal strands by creating relative movement between the fibers in the rope.

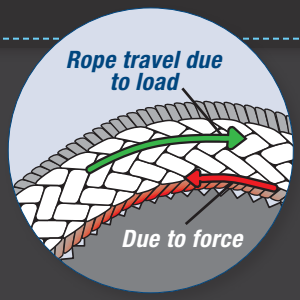

WITH CHAFE GEAR (HMPE ON HMPE)

External abrasion is primarily limited to the chafe gear itself, and the relative movement of internal and external fibers is greatly reduced or eliminated completely.

Saturn Dynalene PRODUCT CODE: 988

Saturn Dynalene is a unique product that protects the strength member from abrasion, yet allows the rope to be easily inspected for both internal and external fiber wear. This chafe protector is made from cut and abrasion resistant Dyneema® fiber with Samson's propietary Saturn coating to enhance abrasion resistance and reduce operating temperatures. Saturn Dynalene is permanently spliced over the rope and acts as a sacrificial cover, protecting it from abrasion and wear in mooring, tug, and offshore applications.

Saturn Dynalene is fully repairable in the field, does not absorb water, and floats. It is easy to install anywhere on the rope.

FEATURES:

- Lightweight
- Floats
- Easy inspection without removal
- Excellent durability
- Improved coating for enhanced abrasion resistance

SIZE DESIGNATION	FITS ROPE DIAMETER		COVERS SPLICE DIAMETER	
	INCHES	MILLIMETERS	INCHES	MILLIMETERS
Small	7/8" – 1-1/4"	22 – 30 mm	5/8" – 1"	16 – 24 mm
Medium	1-5/16" – 1-5/8"	32 – 40 mm	1-1/8" – 1-3/8"	28 – 34 mm
Large	1-3/4" – 3"	44 – 72 mm	1-1/2" – 2-5/8"	36 – 64 mm
Extra-Large	3-1/4" – 4"	80 – 96 mm	2-3/4" – 3-1/4"	68 – 80 mm

SIZE DESIGNATION	FITS ROPE CIRCUMFERENCE		COVERS SPLICE CIRCUMFERENCE	
	INCHES	MILLIMETERS	INCHES	MILLIMETERS
Small	2-3/4" – 3-3/4"	66 – 90 mm	2" – 3"	48 – 72 mm
Medium	4" – 5"	96 – 120 mm	3-1/2" – 4-1/8"	84 – 100 mm
Large	5-1/2" – 9"	132 – 216 mm	4-1/2" – 8"	108 – 192 mm
Extra-Large	10" – 12"	240 – 288 mm	8-1/2" – 10"	204 – 240 mm

WITH Dyneema®

Saturn Dynalene is a great choice for mooring, tug, and offshore applications. Field repairable, rope is easily inspected without removal.

DC Gard PRODUCT CODE: 706 TC Gard PRODUCT CODE: 707

DC Gard is a tightly braided cover construction of Dyneema® fiber that is spliced onto the strength member to protect it from wear and abrasion in specific areas. Designed for use in applications like tug operations, where frequent handling and use put a premium on rope protection and resistance to snagging. For vessels where frequent mooring operations are the norm, DC Gard provides maximum protection for working ropes.

FEATURES:

- Light and flexible
- Floats
- Can be removed for rope inspection
- Cut resistant
- Superior durability

If operating in regions where extreme heat is an issue, contact Customer Service for information about Samson's TC Gard made with Technora®.

DC GARD SPECIFICATIONS

SIZE DESIGNATION	FITS ROPE DIAMETER		COVERS SPLICE DIAMETER	
	INCHES	MILLIMETERS	INCHES	MILLIMETERS
Size C	1" – 1-1/4"	24 – 30 mm	9/16" – 5/8"	14 – 16 mm
Size D	1-5/16" – 1-3/4"	32 – 44 mm	3/4" – 1"	18 – 24 mm
Size E	1-7/8" – 2-1/2"	46 – 60 mm	1-1/8" – 1-3/8"	28 – 34 mm
Size F	2-5/8" – 3-1/8"	64 – 76 mm	1-1/2" – 1-3/4"	36 – 44 mm
Size G	3-1/4" – 4-1/4"	80 – 104 mm	1-7/8" – 2-3/8"	45 – 57 mm
Size H	4-1/2" – 5-3/4"	110 – 146 mm	2-1/2" – 3-1/4"	60 – 80 mm
Size I	6" – 6-3/4"	152 – 172 mm	3-1/2" – 3-3/4"	86 – 92 mm
Size J	7" – 7-3/4"	178 – 196 mm	4" – 4-1/2"	96 – 110 mm
Size K	8"	204 mm	4-5/8" – 5"	112 – 120 mm

SIZE DESIGNATION	FITS ROPE CIRCUMFERENCE		COVERS SPLICE CIRCUMFERENCE	
	INCHES	MILLIMETERS	INCHES	MILLIMETERS
Size C	3" – 3-3/4"	72 – 90 mm	1-3/4" – 2"	42 – 48 mm
Size D	4" – 5-1/2"	96 – 132 mm	2-1/4" – 3"	54 – 72 mm
Size E	5-5/8" – 7-1/2"	136 – 180 mm	3-1/2" – 4-1/8"	84 – 100 mm
Size F	8" – 9-1/2"	192 – 228 mm	4-1/2" – 5-1/2"	108 – 132 mm
Size G	10" – 13"	240 – 312 mm	5-5/8" – 7-1/8"	136 – 174 mm
Size H	13-1/2" – 17-1/4"	328 – 438 mm	7-1/2" – 10"	180 – 240 mm
Size I	18" – 20-1/4"	456 – 516 mm	10-1/2" – 11-1/4"	254 – 272 mm
Size J	21" – 23-1/4"	534 – 588 mm	12" – 13-1/2"	288 – 328 mm
Size K	24"	612 mm	14" – 15"	336 – 360 mm

WITH Dyneema®

Can be removed for rope inspection, excellent choice for tug and mooring applications.

DC Gard provides maximum protection for working ropes.

SAMSON PATENT PENDING TECHNOLOGY

PRODUCT CODE: 705

DC Moor-Gard

DC Moor-Gard has been redesigned and optimized for lower operating temperatures and longer life for your mooring lines. This new patent pending design is modeled after Samson's robust Turbo series of covers for jacketed ropes and is made of 100% Dyneema® fiber. It features Samson's proprietary Saturn coating for enhanced abrasion resistance and reduced friction between the rope and chafe guard. PATENT PENDING.

FEATURES:

- Fixed or adjustable for easy positioning
- Lightweight
- Flexible
- Floats
- Easily removed for rope inspection

SIZE DESIGNATION	FITS ROPE DIAMETER		COVERS SPLICE DIAMETER	
	INCHES	MILLIMETERS	INCHES	MILLIMETERS
Size E	1" – 1-3/4"	24 – 44 mm	3/4" – 1"	18 – 24 mm
Size F	1-7/8" – 2-1/4"	46 – 56 mm	1-1/8" – 1-3/8"	28 – 34 mm
Size G	2-3/8" – 3-1/4"	57 – 80 mm	1-1/2" – 1-3/4"	36 – 44 mm

SIZE DESIGNATION	FITS ROPE CIRCUMFERENCE		COVERS SPLICE CIRCUMFERENCE	
	INCHES	MILLIMETERS	INCHES	MILLIMETERS
Size E	3" – 5-1/4"	72 – 132 mm	2-1/4" – 3"	54 – 72 mm
Size F	5-5/8" – 6-3/4"	138 – 168 mm	3-3/8" – 4-1/8"	84 – 102 mm
Size G	7-1/8" – 9-3/4"	171 – 240 mm	4-1/2" – 5-1/4"	108 – 132 mm

WITH Dyneema®

PRODUCT CODE: 976

Technolene

The construction of Technolene is similar to Dynalene, but the fiber composition is Technora®, an aramid fiber with very high heat resistance. Technolene should be specified where synthetic ropes are subject to both abrasion and high temperatures from reflected heat sources or friction.

FEATURES:

- Excellent heat resistance for high heat applications/ environments
- Easy inspection without removal
- Excellent durability and cut resistance

SIZE DESIGNATION	FITS ROPE DIAMETER		COVERS SPLICE DIAMETER	
	INCHES	MILLIMETERS	INCHES	MILLIMETERS
Small	7/8" – 1-1/4"	22 – 30 mm	5/8" – 1"	16 – 24 mm
Medium	1-5/16" – 1-5/8"	32 – 40 mm	1-1/8" – 1-3/8"	28 – 34 mm
Large	1-3/4" – 3"	44 – 72 mm	1-1/2" – 2-5/8"	36 – 64 mm
Extra-Large	3-1/4" – 4"	80 – 96 mm	2-3/4" – 3-1/4"	68 – 80 mm

SIZE DESIGNATION	FITS ROPE CIRCUMFERENCE		COVERS SPLICE CIRCUMFERENCE	
	INCHES	MILLIMETERS	INCHES	MILLIMETERS
Small	2-3/4" – 3-3/4"	66 – 90 mm	2" – 3"	48 – 72 mm
Medium	4" – 5"	96 – 120 mm	3-1/2" – 4-1/8"	84 – 100 mm
Large	5-1/2" – 9"	132 – 216 mm	4-1/2" – 8"	108 – 192 mm
Extra-Large	10" – 12"	240 – 288 mm	8-1/2" – 10"	204 – 240 mm

technora® The Power of Aramid

Superior heat and abrasion resistance in high ambient heat applications.

Excellent protection that allows for easy inspection without removal.

Economical

Permanently sewn configuration or removable "hook and loop" configuration

DuraTech PRODUCT CODE: 984

DuraTech is a webbed-nylon chafe sleeve. It is available in a permanently sewn configuration or removable "hook and loop" configuration. This chafe sleeve provides an economical, but resilient solution for protecting lines from localized abrasion. The sleeves can be moved and tethered in place. Prefabricated grommets are standard on all sleeves to ensure proper installation. The standard length is 10 feet, with longer lengths available by request.

DuraTech can be installed on rope as well as on eyes.

HOOK AND LOOP SPECIFICATIONS

HOOK & LOOP	FITS ROPE DIAMETER		COVERS SPLICE DIAMETER	
	INCHES	MILLIMETERS	INCHES	MILLIMETERS
Size A	up to 3/4"	up to 18 mm	up to 1/2"	up to 12 mm
Size B	7/8" – 1"	22 – 24 mm	9/16" – 5/8"	14 – 16 mm
Size C	1-1/16" – 1-1/2"	26 – 36 mm	3/4" – 7/8"	18 – 22 mm
Size D	1-5/8" – 2"	40 – 48 mm	1" – 1-1/8"	24 – 28 mm
Size E	2-1/8" – 2-1/2"	52 – 60 mm	1-1/4" – 1-1/2"	30 – 36 mm

HOOK & LOOP	FITS ROPE CIRCUMFERENCE		COVERS SPLICE CIRCUMFERENCE	
	INCHES	MILLIMETERS	INCHES	MILLIMETERS
Size A	up to 2-1/4"	up to 54 mm	up to 1-1/2"	up to 36 mm
Size B	2-3/4" – 3"	66 – 72 mm	1-3/4" – 2"	42 – 48 mm
Size C	3-1/4" – 4-1/2"	78 – 108 mm	2-1/4" – 2-3/4"	54 – 66 mm
Size D	5" – 6"	120 – 144 mm	3" – 3-1/2"	72 – 84 mm
Size E	6-1/2" – 7-1/2"	156 – 180 mm	3-3/4" – 4-1/2"	90 – 108 mm

SEWN SPECIFICATIONS

SEWN	FITS ROPE DIAMETER		COVERS SPLICE DIAMETER	
	INCHES	MILLIMETERS	INCHES	MILLIMETERS
Size F	up to 5/8"	up to 16 mm	up to 3/8"	up to 9 mm
Size G	3/4" – 1"	18 – 24 mm	7/16" – 1/2"	11 – 12 mm
Size H	1-1/16" – 1-3/8"	26 – 34 mm	9/16" – 3/4"	14 – 18 mm
Size I	1-1/2" – 1-5/8"	36 – 40 mm	7/8" – 1"	22 – 24 mm
Size J	1-3/4" – 2"	44 – 48 mm	1-1/16" – 1 1/4"	26 – 30 mm
Size K	2-1/8" – 2-1/2"	52 – 60 mm	1-5/16" – 1 3/8"	32 – 34 mm
Size L	2-5/8" – 3"	64 – 72 mm	1-1/2" – 1 3/4"	36 – 44 mm

SEWN	FITS ROPE CIRCUMFERENCE		COVERS SPLICE CIRCUMFERENCE	
	INCHES	MILLIMETERS	INCHES	MILLIMETERS
Size F	up to 2"	up to 48 mm	up to 1-1/8"	up to 27 mm
Size G	2-1/4" – 3"	54 – 72 mm	1-1/4" – 1-1/2"	33 – 36 mm
Size H	3-1/4" – 4-1/8"	78 – 100 mm	1-3/4" – 2-1/4"	42 – 54 mm
Size I	4-1/2" – 5"	108 – 120 mm	2-3/4" – 3"	66 – 72 mm
Size J	5-1/2" – 6"	132 – 144 mm	3-1/4" – 3-3/4"	78 – 90 mm
Size K	6-1/2" – 7-1/2"	156 – 180 mm	4" – 4-1/8"	96 – 100 mm
Size L	8" – 9"	192 – 216 mm	4-1/2" – 5-1/2"	108 – 132 mm

Great weight to durability ratio

Great abrasion resistance

Easy to install and remove for replacement or rope inspection

Won't absorb water

Floats

Pro-Gard Eye Protector

PRODUCT CODE: 973 **(Hook and Loop)**

Pro-Gard is constructed of dual-woven fabric layers made with HMPE fiber. The finer inner layer allows the rope to adjust to load, while the thicker outer layer is coated to provide a high coefficient of friction to minimize movement on the contact surface. Lightweight Pro-Gard is easily installed in the field, won't absorb water, and floats. Available in 20", 30", 40", and 50" legs.

Pro-Gard Rope Protector

PRODUCT CODE: 974 **(Hook and Loop)**

The hook and loop feature of this product allows this chafe protector to be easily applied over the rope.

Pro-Gard Eye Protector is gusseted at the apex for a better fit.

SIZE DESIGNATION	FITS ROPE DIAMETER	
	INCHES	MILLIMETERS
Size A	3/8" – 5/8"	9 – 16 mm
Size B	3/4" – 1"	18 – 24 mm
Size C	1-1/8" – 1-3/4"	28 – 44 mm
Size D	1-7/8" – 2-1/2"	46 – 60 mm
Size E	2-5/8" – 3-1/4"	64 – 80 mm

SIZE DESIGNATION	FITS ROPE CIRCUMFERENCE	
	INCHES	MILLIMETERS
Size A	1-1/8" – 2"	27 – 48 mm
Size B	2-1/4" – 3"	54 – 72 mm
Size C	3-1/2" – 5-1/2"	84 – 132 mm
Size D	5-5/8" – 7-1/2"	138 – 180 mm
Size E	8" – 10"	192 – 240 mm

Versatile: may be fixed or adjustable

Pro-Moor PRODUCT CODE: 977

The Pro-Moor product has all of the features of the Pro-Gard product but since it is tubular, is generally installed on the product before it leaves the factory. The standard length is 2 meters.

SIZE DESIGNATION	FITS ROPE DIAMETER		FITS ROPE CIRCUMFERENCE	
	INCHES	MILLIMETERS	INCHES	MILLIMETERS
Size B	1-1/8" – 1-1/2"	28 – 36 mm	3-1/2" – 4-1/2"	84 – 108 mm
Size C	1-5/8" – 2"	40 – 48 mm	5" – 6"	120 – 144 mm
Size D	2-1/8" – 2-1/2"	52 – 60 mm	6-1/2" – 7-1/2"	156 – 180 mm
Size E	2-5/8" – 3"	64 – 72 mm	8" – 9"	192 – 216 mm

IFH Chafe-Gard PRODUCT CODE: 999601

Economical
Durable
Able to adjust or fix to rope

IFH (Inverted Fire Hose) Chafe-Gard protects your mooring lines from chock wear. Composed of a tubular braided polyester structure externally coated with a highly wear-resistant rubberized compound. The polyester lining allows mooring lines to adjust under tension while the rubberized exterior's high coefficient of friction minimizes the rope's movement on the chock. Grommets at each end allow attachment of control lines. The standard length is 8 feet.

An inexpensive, durable choice that can be installed as a fixed or adjustable chafe solution.

SIZE DESIGNATION	FITS ROPE DIAMETER	
	INCHES	MILLIMETERS
Size A	1-1/8" – 2"	28 – 48 mm
Size B	2-1/8" – 3"	52 – 72 mm
Size C	2-1/2" – 3-3/4"	60 – 92 mm

SIZE DESIGNATION	FITS ROPE CIRCUMFERENCE	
	INCHES	MILLIMETERS
Size A	3-1/2" – 6"	84 – 144 mm
Size B	6-1/2" – 9"	156 – 216 mm
Size C	7-1/2" – 11-1/4"	180 – 272 mm

Cordura® Chafe Protector

PRODUCT CODE: R6

Durable
Economical

Cordura Chafe Protector is a woven product that is produced in a tubular format. Cordura is 100% industrial nylon with twice the abrasion resistance of normal nylon and three times the abrasion resistance of polyester. This product is commonly added to the eyes of working lines and can be installed on the rope as well. Available in any length.

Chafe Protector can be installed on rope as well as on eyes.

SIZE	FITS ROPE DIAMETER		FITS ROPE CIRCUMFERENCE	
	INCHES	MILLIMETERS	INCHES	MILLIMETERS
2	3/4" – 1"	18 – 24 mm	2-1/4" – 3"	54 – 72 mm
3	1" – 1-1/2"	24 – 36 mm	3" – 4-1/2"	72 – 108 mm
4	1-5/8" – 2-1/8"	40 – 52 mm	5" – 6-1/2"	120 – 156 mm
5	2-1/4" – 2-5/8"	56 – 64 mm	7" – 8"	168 – 192 mm
6	2-3/4" – 3-1/4"	68 – 80 mm	8-1/2" – 10"	204 – 240 mm
8	3-3/8" – 4"	82 – 96 mm	10-1/8" – 12"	246 – 288 mm
10	4-1/8" – 4-5/8"	100 – 112 mm	12-1/2" – 14"	300 – 336 mm

ROPE HARDWARE

Thimbles are designed to protect the rope's eye from cuts and kinking. Samson can supply thimbles in plastic, galvanized steel, bronze, stainless steel or painted steel. The application will determine the appropriate thimble to be specified.

Since thimbles are not designed for load carrying purposes, they are not load rated either by their manufacturers or by Samson. Certification of thimbles is not standard practice, and Samson does not provide ratings for thimbles used in our rope systems.

The working load limit (WLL) includes the combination of all applied loads, static and dynamic, based on normal service. The WLL does not represent the loss of strength in the thimble or rope due to creep and other mechanical, chemical, and environmental factors.

Never use a thimble that is smaller than the size suggested for the rope diameter.

Orkot® Thimble PRODUCT CODE: 963

The Orkot® Thimble is a means of attaching synthetic ropes to wire ropes via a shackle. Products made from Orkot® Marine composite materials have exceptional wear resistance and virtually no swell in water, which provides dimensional stability. They offer tolerance to edge loading and misalignment even with the heaviest loads, and are particularly suited to freeze fitting without the danger of shattering. Orkot® TLM Marine is the standard grade of material incorporating a woven-fabric reinforcement and solid lubricants within a thermosetting resin matrix. The material can be used in conjunction with water and grease lubrication, and can be run dry for limited periods.

SIZE DESIGNATION Rope Diameter		SIZE DESIGNATION Rope Circumference		Orkot Thimble Stock #	SHACKLE Pin Diameter INCHES	Jaw Winch INCHES	Working Load Limit TONS
INCHES	MILLIMETERS	INCHES	MILLIMETERS				
7/8"	22 mm	2-3/4"	68 mm	SSB-6	1"	1.4"	6.5 tons
1"	24 mm	3"	72 mm	SSB-8	1-1/8"	1.7"	8.5 tons
1-1/8"	28 mm	3-1/2"	86 mm	SSB-9	1-1/4"	1.8"	9.5 tons
1-1/4"	30 mm	3-3/4"	92 mm	SSB-12	1-3/8"	2.0"	12.0 tons
1-3/8"	34 mm	4-1/4"	104 mm	SSB-13	1-1/2"	2.3"	13.5 tons
1-1/2"	36 mm	4-1/2"	110 mm	SSB-17	1-5/8"	2.4"	17.0 tons
1-3/4"	44 mm	5-1/2"	134 mm	SSB-25	2"	2.9"	25.0 tons
2"	48 mm	6"	152 mm	SSB-35	2-1/4"	3.3"	35.0 tons
2-1/2"	60 mm	7-1/2"	190 mm	SSB-55	2-3/4"	4.1"	55.0 tons
3"	72 mm	9"	216 mm	SSB-85	3-1/4"	5.0"	85.0 tons

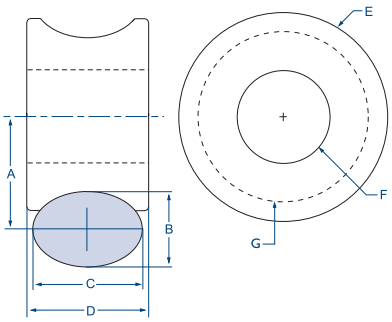

Orkot Thimble Stock #	A INCHES	B INCHES	C INCHES	D INCHES	E INCHES	F INCHES	G INCHES
SSB-6	1.38	0.88	1.19	1.32	2.31	1.02	1.88
SSB-8	1.56	1.00	1.44	1.56	2.53	1.16	2.12
SSB-9	1.75	1.13	1.56	1.69	2.94	1.27	2.37
SSB-12	1.94	1.25	1.66	1.84	3.25	1.40	2.63
SSB-13	2.13	1.38	1.88	2.06	3.56	1.53	2.88
SSB-17	2.31	1.50	2.00	2.19	3.88	1.65	3.12
SSB-25	2.75	1.75	2.38	2.63	4.63	2.06	3.75
SSB-35	3.13	2.00	2.75	3.00	5.25	2.31	4.26
SSB-55	3.88	2.50	3.63	3.88	6.50	2.81	5.26
SSB-85	4.63	3.00	4.50	4.75	7.75	3.31	6.26

Blue Line Thimble PRODUCT CODE: 930

The Blue Line Thimble is compatible with Samson's high-performance, high-modulus synthetic fiber rope products such as AmSteel®-Blue, Force-8, and DPX™-75. The tubular, gusseted design creates a high-strength thimble that protects the rope and maintains the proper bending radius when connected to mating hardware. Available in stainless steel or powder coated upon request.

Stainless Steel

Painted

SIZE DESIGNATION Rope Diameter	SIZE DESIGNATION Rope Circumference	Thimble Wt. POUNDS	A INCHES	B INCHES	C INCHES	D INCHES	E INCHES	F INCHES
3/16" – 3/8"	9/16" – 1-1/8"	0.80 lb	0.50"	3.3"	0.90"	0.20"	0.30"	0.90"
7/16" – 1/2"	1-1/4" – 1-1/2"	1.1 lb	0.60"	3.7"	1.1"	0.20"	0.40"	1.2"
9/16" – 5/8"	1-3/4" – 2"	1.4 lb	0.80"	4.4"	1.3"	0.20"	0.50"	1.8"
3/4" – 7/8"	2-1/4" – 2-3/4"	2.0 lb	0.90"	4.9"	1.4"	0.20"	0.60"	1.9"
1" – 1-1/8"	3" – 3-1/2"	5.8 lb	1.4"	7.5"	2.4"	0.30"	0.90"	2.9"
1-1/4" – 1-1/2"	3-3/4" – 4-1/2"	7.5 lb	1.8"	9.0"	2.8"	0.30"	1.1"	3.7"
1-5/8" – 1-11/16"	5" – 5-1/4"	10.3 lb	2.0"	10.0"	3.0"	0.30"	1.2"	3.8"
1-3/4" – 2"	5-1/2" – 6"	10.8 lb	2.2"	10.6"	3.2"	0.30"	1.4"	3.9"

SIZE DESIGNATION Rope Diameter	SIZE DESIGNATION Rope Circumference	Thimble Wt. KILOGRAMS	A mm	B mm	C mm	D mm	E mm	F mm
5 – 15 mm	15 – 27 mm	0.36 kg	12 mm	84 mm	23 mm	4 mm	8 mm	24 mm
11 – 12 mm	33 – 36 mm	0.50 kg	15 mm	95 mm	27 mm	5 mm	10 mm	31 mm
14 – 16 mm	42 – 48 mm	0.70 kg	19 mm	112 mm	32 mm	5 mm	12 mm	46 mm
18 – 22 mm	54 – 66 mm	0.91 kg	22 mm	125 mm	35 mm	5 mm	15 mm	47 mm
24 – 28 mm	68 – 84 mm	2.6 kg	35 mm	190 mm	60 mm	7 mm	22 mm	73 mm
30 – 36 mm	90 – 108 mm	3.4 kg	45 mm	228 mm	70 mm	7 mm	27 mm	94 mm
40 – 42 mm	120 – 126 mm	4.7 kg	50 mm	255 mm	75 mm	7 mm	31 mm	97 mm
44 – 48 mm	132 – 144 mm	4.9 kg	55 mm	268 mm	80 mm	7.5 mm	35 mm	99 mm

For use with Ultra Blue-8 add 1/4" (6 mm) to the rope diameter to determine the appropriate thimble size.

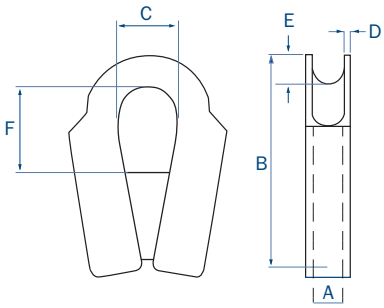

Heavy Duty Hawser Thimble PRODUCT CODE: 933

The cast-steel Heavy Duty Hawser Thimble is designed for use with wire rope or high-performance synthetic fiber ropes such as AmSteel®-Blue, Force-8, and DPX™-75.The galvanized thimble provides smooth and even grooves, maximum strength in critical areas, and the proper bending radius for the rope. When used with synthetic ropes, the thimble eye should be lashed at approximately 2, 4, 8, and 10 o'clock on the thimble circumference to secure it to the rope when not in service.

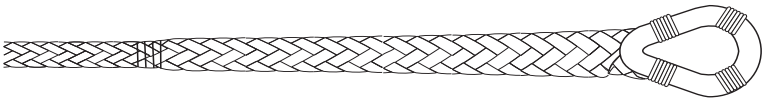

Lashed Thimble

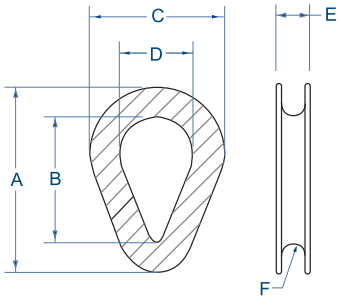

SIZE DESIGNATION Fits Rope Diameter	SIZE DESIGNATION Fits Rope Circumference	Thimble Wt. POUNDS	A INCHES	B INCHES	C INCHES	D INCHES	E INCHES	F INCHES	SIZE DESIGNATION Fits Rope Diameter	SIZE DESIGNATION Fits Rope Circumference	Thimble Wt. KILOGRAMS
5/8" – 3/4"	2" – 2-1/4"	3.5 lb	6.9"	4.5"	5.0"	3.0"	1.2"	0.40	16 – 18 mm	48 – 54 mm	1.6 kg
7/8" – 1"	2-3/4" – 3"	6.0 lb	8.6"	5.8"	6.3"	3.8"	1.4"	0.50	22 – 24 mm	66 – 72 mm	2.7 kg
1-1/8" – 1-1/4"	3-1/2" – 3-3/4"	9.5 lb	10.1"	6.8"	7.3"	4.3"	1.7"	0.7	28 – 30 mm	84 – 90 mm	4.3 kg
1-3/8" – 1-1/2"	4-1/8" – 4-1/2"	18.5 lb	12.1"	8.0"	8.8"	5.0"	2.2"	0.9	34 – 36 mm	100 – 108 mm	8.4 kg
1-5/8" – 1-3/4"	5" – 5-1/2"	24.0 lb	12.8"	8.0"	9.3"	5.0"	2.4"	0.9	40 – 44 mm	120 – 132 mm	10.9 kg
1-7/8" – 2"	5-5/8" – 6"	33.5 lb	14.8"	9.5"	10.8"	6.0"	2.7"	1.1	46 – 48 mm	138 – 144 mm	15.2 kg
2-1/8" – 2-1/4"	6-1/2" – 7"	53.5 lb	17.1"	11.0"	12.5"	7.0"	3.1"	1.2	52 – 56 mm	156 – 168 mm	24.3 kg
2-3/8" – 2-1/2"	7-1/8" – 7 1/2"	81.5 lb	19.3"	12.8"	14.3"	8.3"	3.9"	1.4	58 – 60 mm	174 – 180 mm	37.0 kg
2-3/4" – 3"	8-1/2" – 9"	137 lb	24.5"	15.0"	17.0"	9.4"	4.9"	1.6	68 – 72 mm	204 – 216 mm	61.9 kg

For use with Ultra Blue-8 add 1/4" (6 mm) to the rope diameter to determine the appropriate thimble size.

Bronze Thimble PRODUCT CODE: 920

Bronze Rope Thimbles are made from a high strength, noncorrosive, nonsparking nickel-aluminum bronze alloy, ideal for marine applications. This rope thimble was developed primarily for use with nylon, manila, polypropylene, and polyvinyl chloride ropes. Four rings or "keepers" secure the rope from jumping out of the thimble. Eighteen sizes are available in rope-diameter sizes from 3/8" to 4-3/4".

SIZE DESIGNATION Rope Diameter	SIZE DESIGNATION Rope Diameter	Shackle Size INCHES	A INCHES	B INCHES	C INCHES	D INCHES	G INCHES	H INCHES	T INCHES	Weight POUNDS	Weight KILOGRAMS
3/8" – 7/16"	9 – 11 mm	3/8"	7/8"	1 1/2"	9/16"	3/4"	2-1/16"	2-7/16"	3/32"	0.20 lb	0.09 kg
1/2" – 9/16"	12 – 14 mm	3/8"	1"	1 5/8"	11/16"	29/32"	2-3/8"	2-13/16"	7/64"	0.40 lb	0.18 kg
5/8"	16 mm	1/2"	1-1/8"	2"	7/8"	1-1/8"	3-1/8"	3-1/2"	1/8"	0.60 lb	0.27 kg
13/16" – 15/16"	20 – 23 mm	5/8"	1-1/4"	2 5/16"	1-1/16"	1-3/8"	3-3/4"	4-3/16"	5/32"	0.90 lb	0.41 kg
1"	24 mm	3/4"	1-5/8"	2 3/4"	1-3/16"	1-9/16"	4-1/4"	4-11/16"	3/16"	1.6 lb	0.73 kg
1-1/8" – 1-1/4"	28 – 30 mm	7/8"	1-7/8"	3 1/16"	1-7/16"	1-27/32"	5-1/16"	5-3/16"	13/64"	2.1 lb	1.0 kg
1-5/16"	32 mm	7/8"	2-1/8"	3 5/8"	1-1/2"	1-15/16"	5-1/2"	5-13/16"	7/32"	2.6 lb	1.2 kg
1-1/2"	36 mm	1"	2-3/8"	4 1/16"	1-11/16"	2-5/32"	6-1/4"	6-1/2"	15/64"	3.7 lb	1.7 kg
1-5/8"	40 mm	1-1/8"	2-5/8"	4 1/2"	1-13/16"	2-5/16"	6-3/4"	7-1/16"	1/4"	4.8 lb	2.2 kg
1-3/4"	44 mm	1-1/4"	2-7/8"	4 15/16"	2"	2-17/32"	7-3/8"	7-3/4"	17/64"	6.8 lb	3.1 kg
2"	48 mm	1-1/4"	3-1/8"	5 3/8"	2-1/4"	2-13/16"	8-3/8"	8-5/8"	9/32"	7.7 lb	3.5 kg
2-1/8"	52 mm	1-3/8"	3-1/2"	5 13/16"	2-3/8"	2-31/32"	9"	9-1/8"	19/64"	9.5 lb	4.3 kg
2-1/4"	56 mm	1-1/2"	3-7/8"	6 1/4"	2-1/2"	3-1/8"	9-3/8"	9-5/8"	5/16"	11.0 lb	5.0 kg
2-5/8"	64 mm	1-5/8"	4-3/8"	7"	2-7/8"	3-5/8"	10-5/8"	10-3/4"	3/8"	16.5 lb	7.5 kg
2-3/4" – 2-7/8"	68 – 70 mm	2"	4-7/8"	8"	3-1/4"	4-1/8"	11-3/4"	12-1/8"	7/16"	25.0 lb	11.3 kg
3" – 3-1/4"	72 – 80 mm	2"	5-3/8"	9 1/4"	3-1/2"	4-1/2"	13-1/8"	13-7/8"	1/2"	38.0 lb	17.2 kg
3-3/4"	92 mm	—	8"	10"	4"	5-3/8"	14-5/8"	15-1/2"	11/16"	60.0 lb	27.2 kg
4-3/4"	116 mm	—	9"	12-1/2"	6-3/8"	8-3/8"	22-7/8"	21-1/2"	1"	225 lb	102 kg

Not recommended for use with Class II ropes. Dimensions are approximate—within standard foundry practice.

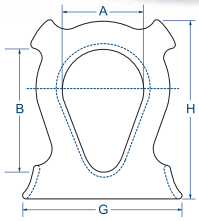

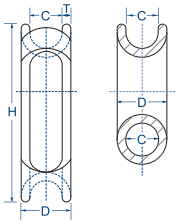

Galvanized Painted Thimble PRODUCT CODE: 929

The Galvanized Painted Thimble provides a new dimension in "lightweight" heavy-duty rope thimbles with this improved design for use in the marine towing industry. Light enough for easy handling, but with the maximum high strength at critical points. The generous inside dimensions allow these thimbles to fit any large towing shackle, or any large regular shackle.

SIZE DESIGNATION Rope Diameter	SIZE DESIGNATION Rope Diameter	A INCHES	B INCHES	C INCHES	D INCHES	E INCHES	W INCHES	Weight POUNDS	Weight KILOGRAMS
1-1/8" – 1-1/4"	28 – 30 mm	2"	3-1/2"	5-3/8"	1-9/16"	1-7/16"	1-15/16"	2.5 lb	1.1 kg
1-5/16" – 1-5/8"	32 – 40 mm	3-3/8"	5-1/8"	7-7/8"	1-13/16"	1-3/4"	2-1/4"	5.5 lb	2.5 kg
2" – 2-1/4"	48 – 56 mm	3-1/8"	6"	9-1/4"	2-3/4"	2-3/4"	3-3/8"	11.0 lb	5.0 kg
2-5/8"	64 mm	4-1/4"	6-1/2"	11"	3-1/8"	3"	3-3/4"	20.5 lb	9.3 kg
3"	72 mm	4-3/4"	7-5/8"	12"	3-1/2"	3-1/4"	4"	26.0 lb	11.8 kg
3-1/4"	80 mm	5"	8-1/2"	13-1/2"	3-7/8"	3-1/2"	4-1/4"	35.5 lb	16.1 kg
3-5/8" – 4"	88 – 96 mm	6"	9-1/2"	15-1/2"	5-3/8"	4-1/2"	5-1/2"	48.0 lb	21.8 kg
4-1/4" – 4-5/8"	104 – 112 mm	6-1/8"	10"	17"	5-3/4"	5-1/4"	6"	56.5 lb	25.6 kg
5" – 5-1/4"	120 – 128 mm	6-7/16"	11"	18-1/2"	6-1/2"	5-3/4"	6-5/8"	64.0 lb	29.0 kg
5-5/8" – 6"	142 – 152 mm	10"	11-7/8"	24"	6-1/2"	6-1/8"	7"	80.0 lb	36.3 kg
6-1/4" – 6-5/8"	158 – 168 mm	12"	16-1/4"	27"	8"	7-3/4"	9"	270 lb	122 kg
7" – 7-1/4"	178 – 184 mm	13-7/8"	19-3/4"	33-3/4"	9-1/4"	8-1/2"	10-1/4"	378 lb	171 kg

Not recommended for use with Class II ropes. Dimensions are approximate—in accordance with standard foundry practices.
Note: "D" Dimension is larger than "E" Dimension to allow for the larger after splicing diameter of the rope.

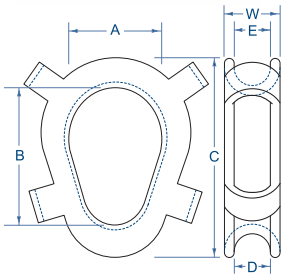

Galvanized HD Wire Thimble PRODUCT CODE: 924

The Wire Thimble protects against wear and deformation of the rope eye. Designed with the proper bending radius to maintain rope strength and provide longer service life. This thimble meets the performance requirements of Federal Specifications FF-T-276b Type III (except for those provisions required of the contractor.)

SIZE DESIGNATION Rope Diameter	SIZE DESIGNATION Rope Diameter	A INCHES	B INCHES	C INCHES	D INCHES	E INCHES	F INCHES	G INCHES	H INCHES	Weight POUNDS	Weight KILOGRAMS
1/4"	6 mm	2.2"	1.6"	1.5"	0.90"	0.40"	0.30"	0.10"	0.30"	0.07 lb	0.03 kg
5/16"	8 mm	2.5"	1.9"	1.8"	1.1"	0.50"	0.30"	0.10"	0.30"	0.12 lb	0.05 kg
3/8"	9 mm	2.9"	2.1"	2.1"	1.1"	0.60"	0.40"	0.10"	0.40"	0.22 lb	0.10 kg
7/16"	11 mm	3.3"	2.4"	2.4"	1.3"	0.70"	0.50"	0.10"	0.50"	0.35 lb	0.16 kg
1/2"– 9/16"	12 – 14 mm	3.6"	2.8"	2.8"	1.5"	0.90"	0.60"	0.20"	0.50"	0.51 lb	0.23 kg
5/8"	16 mm	4.3"	3.3"	3.1"	1.8"	1.0"	0.70"	0.20"	0.50"	0.76 lb	0.34 kg
3/4"	18 mm	5.0"	3.8"	3.8"	2.0"	1.2"	0.80"	0.20"	0.70"	1.58 lb	0.72 kg
7/8"	22 mm	5.5"	4.3"	4.3"	2.3"	1.4"	0.90"	0.20"	0.80"	1.78 lb	0.81 kg
1"	24 mm	6.1"	4.5"	4.8"	2.5"	1.6"	1.1"	0.30"	0.90"	3.14 lb	1.42 kg
1-1/8"– 1-1/4"	28 – 30 mm	7.0"	5.1"	5.9"	2.9"	1.9"	1.3"	0.30"	1.3"	4.00 lb	1.81 kg
1-1/4"– 1-3/8"	30 – 34 mm	9.9"	6.5"	6.8"	3.5"	2.3"	1.4"	0.40"	1.3"	8.11 lb	3.68 kg
1-3/8"– 1-1/2"	34 – 36 mm	9.0"	6.3"	7.1"	3.5"	2.6"	1.6"	0.50"	1.3"	13.0 lb	5.87 kg
1-5/8"	40 mm	11.3"	8.0"	8.1"	4.0"	3.0"	1.7"	0.50"	1.4"	17.0 lb	7.71 kg
1-3/4"	44 mm	12.2"	9.0"	8.5"	4.5"	3.5"	1.8"	0.50"	1.5"	17.8 lb	8.05 kg
1-7/8"– 2"	45 – 48 mm	15.1"	12.0"	10.4"	6.0"	3.4"	2.1"	0.50"	1.7"	27.8 lb	12.6 kg
2-1/4"	56 mm	17.5"	14.0"	11.9"	7.0"	3.9"	2.4"	0.60"	1.8"	39.5 lb	17.9 kg

Not recommended for use with Class II ropes.

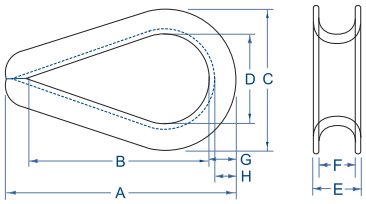

Nylite Assemblies

SPOOLS, SHIELDS, AND SHACKLE ASSEMBLY

Easily installed into or removed from a premade soft eye. Nylite spool is only 1/7th the weight of steel. Connectors will not deform or rupture from repeated loadings. The shackle takes advantage of the high-strength Nylite connector and synthetic rope.

WORKING DETAILS

- Working loads listed are in tons (2,000 lb).
- Working loads, as given, are based on pin-bore relationship provided by use of the Nylite Shackle. When using a nonstandard pin, the working load as given DOES NOT APPLY.
- The HP aluminum spool is available for use with high-performance Class II ropes in sizes -1 through -5.
- Aluminum spools are not recommended for continuous use in submerged marine environments.
- All working load values are based on a 4:1 safety factor.
- Assembly ratings are based on the use of designated spools and shackles. Spools used in conjunction with other hardware are not rated by Samson.

NYLITE SHIELDS Product Code: 969

Nylite shields are designed for use with specific rope, spool, and shackle sizes. See chart below for information.

NYLITE SPOOLS

Product Code: 969

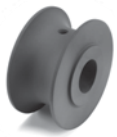

HP Aluminum Spool
(sizes -1 to -5)

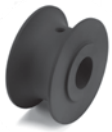

Nylite Spool
(sizes -1 to -9)

SHACKLES

Product Code: 961

The shackle working load limit (WLL) is stamped on each shackle.

-1 and -2 shackles are Electrolytic Zinc coated per ASTM B633-07 SC2 Type III.

Sizes -3 through -9 shackles are hot-dip galvanized per ASTM A123.

CLASS I ASSEMBLY *Nylite Assembly with Nylon Spool*

Shackle Type	Product Code	Size	Shield Color	Fits Rope Diameter MIN.	Fits Rope Diameter MAX	Fits Rope Circumference MIN.	Fits Rope Circumference MAX	Samson Minimum Eye Size INCHES	Assembly Working Load TONS	Weight Each POUNDS	Fits Rope Diameter MIN.	Fits Rope Diameter MAX	Fits Rope Circumference MIN.	Fits Rope Circumference MAX	Samson Minimum Eye Size MM	Assembly Working Load TONS	Weight Each KG
Zinc Plated	964-0320	-1	Blue	3/8"	1/2"	1-1/8"	1-1/2"	2-3/16"	1.1 tons	0.50 lb	9 mm	12 mm	27 mm	36 mm	55.6 mm	1.1 tons	0.23 kg
Zinc Plated	964-0400	-2	Red	9/16"	5/8"	1-3/4"	2"	2-3/4"	1.6 tons	1.0 lb	14 mm	16 mm	42 mm	48 mm	68.0 mm	1.6 tons	0.45 kg
Galvanized	964-0520	-3	Green	3/4"	13/16"	2-1/4"	2-1/2"	3-3/4"	2.5 tons	1.6 lb	18 mm	20 mm	54 mm	60 mm	92.0 mm	2.5 tons	0.73 kg
Galvanized	964-0680	-4	Orange	7/8"	1-1/16"	2-3/4"	3-1/4"	4-7/8"	4.5 tons	3.8 lb	22 mm	26 mm	66 mm	78 mm	124 mm	4.5 tons	1.7 kg
Galvanized	964-0840	-5	Black	1-1/8"	1-5/16"	3-1/2"	4"	6-1/8"	7.5 tons	6.2 lb	28 mm	32 mm	84 mm	96 mm	156 mm	7.5 tons	2.8 kg
Galvanized	964-1120	-6	Yellow	1-1/2"	1-3/4"	4-1/2"	5-1/2"	7-5/8"	12.5 tons	19.0 lb	36 mm	44 mm	108 mm	132 mm	194 mm	12.5 tons	8.6 kg
Galvanized	964-1440	-7	Black	2"	2-1/4"	6"	7"	9-3/4"	20.0 tons	24.0 lb	48 mm	56 mm	144 mm	168 mm	248 mm	20.0 tons	10.9 kg
Galvanized	964-1680	-8	Black	2-1/2"	2-5/8"	7-1/2"	8"	11-1/4"	25.0 tons	38.0 lb	60 mm	64 mm	180 mm	192 mm	286 mm	25.0 tons	17.2 kg
Galvanized	964-2080	-9	Black	2-3/4"	3 1/4"	8-1/2"	10"	14"	35.0 tons	64.0 lb	68 mm	80 mm	204 mm	240 mm	356 mm	35.0 tons	29.0 kg

-1 and -2 shackles are Electrolytic Zinc coated per ASTM B633-07 SC2 Type III. Sizes -3 through -9 shackles are hot-dip galvanized per ASTM A123.

CLASS II ASSEMBLY *Nylite Assembly with HP Aluminum Spool*

Shackle Type	Product Code	Size	Shield Color	Fits Rope Diameter MIN.	Fits Rope Diameter MAX	Fits Rope Circumference MIN.	Fits Rope Circumference MAX	Samson Minimum Eye Size INCHES	Assembly Working Load TONS	Weight Each POUNDS	Fits Rope Diameter MIN.	Fits Rope Diameter MAX	Fits Rope Circumference MIN.	Fits Rope Circumference MAX	Samson Minimum Eye Size MM	Assembly Working Load TONS	Weight Each KG
Zinc Plated	964-0321	-1	Blue	3/8"	1/2"	1-1/8"	1-1/2"	2-3/16"	2.7 tons	0.53 lb	9 mm	12 mm	27 mm	36 mm	56.6 mm	2.7 tons	1.2 kg
Zinc Plated	964-0401	-2	Red	9/16"	5/8"	1-3/4"	2"	2-3/4"	4.8 tons	1.1 lb	14 mm	16 mm	42 mm	48 mm	68.0 mm	4.8 tons	2.3 kg
Galvanized	964-0521	-3	Green	3/4"	13/16"	2-1/4"	2-1/2"	3-3/4"	5.8 tons	1.8 lb	18 mm	20 mm	54 mm	60 mm	92.0 mm	5.8 tons	3.9 kg
Galvanized	964-0681	-4	Orange	7/8"	1-1/16"	2-3/4"	3-1/4"	4-7/8"	11.5 tons	4.1 lb	22 mm	26 mm	66 mm	78 mm	124 mm	11.5 tons	9.1 kg
Galvanized	964-0841	-5	Black	1-1/8"	1-5/16"	3-1/2"	4"	6-1/8"	14.0 tons	6.8 lb	28 mm	32 mm	84 mm	96 mm	156 mm	14.0 tons	14.9 kg

-1 and -2 shackles are Electrolytic Zinc coated per ASTM B633-07 SC2 Type III. Sizes -3 through -5 shackles are hot-dip galvanized per ASTM A123.

Size	Spool Inside Dia.	Spool Outside Dia.	Pin Diameter*	A INCHES	B INCHES	C INCHES	D INCHES	E INCHES	F INCHES	G INCHES
-1	0.46"	1.50"	0.44"	0.88"	1.08"	1.11"	2.41"	0.38"	1.99"	2.34"
-2	0.58"	1.75"	0.56"	1.13"	1.21"	1.38"	3.11"	0.50"	2.38"	2.88"
-3	0.64"	2.25"	0.63"	1.38"	1.61"	1.77"	3.54"	0.56"	3.02"	3.70"
-4	0.89"	3.00"	0.88"	1.75"	1.90"	2.29"	4.70"	0.75"	3.79"	4.71"
-5	1.02"	3.75"	1.00"	2.13"	2.15"	2.85"	5.55"	0.88"	4.85"	5.95"
-6	1.54"	5.00"	1.50"	2.63"	3.14"	3.80"	7.75"	1.37"	6.30"	7.85"
-7	1.75"	6.25"	1.63"	3.25"	3.75"	4.80"	8.90"	1.50"	7.93"	9.89"
-8	2.00"	7.25"	1.75"	3.75"	4.13"	5.61"	10.13"	1.75"	9.24"	11.47"
-9	2.25"	9.00"	2.00"	4.63"	5.06"	6.95"	12.15"	2.00"	11.45"	14.28"

**Sizes -1 to -5 are supplied with jam nuts and cotter pins. Larger sizes have cotter pins and standard nuts.*

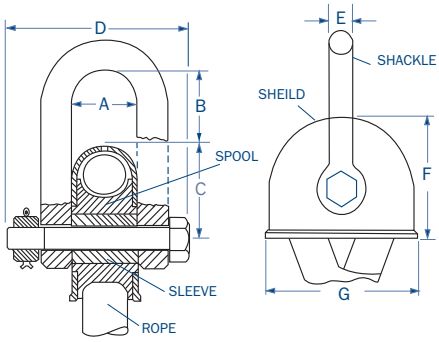

Chafe Criteria

The chafe gear selector is designed to help you determine which product is suitable for your application based on whether you need sliding or fixed chafe protection, the construction of the rope, and the level of abrasion to which the rope will be exposed. Please confirm your selection with a Samson technical sales manager, engineer, or customer service representative.

PRODUCT NAME	FAMILY CODE	PAGE	SLIDING	FIXED	ABRASION LEVEL: LIGHT Non-jacketed	LIGHT Jacketed	MEDIUM Non-jacketed	MEDIUM Jacketed	HEAVY Non-jacketed	HEAVY Jacketed
HIGH-PERFORMANCE CHAFE PROTECTION										
DC Gard	706	4		X	X		X		X	
DC Moor-Gard	705	5	X		X	X	X	X	X	X
Saturn Dynalene	988	4		X	X		X		X	
TC Gard	707	4		X			X		X	
Technolene	976	5		X	X		X		X	
STANDARD CHAFE PROTECTION										
Cordura® Chafe Protector	R6	7	X		X	X	X	X		
DuraTech	984	6	X		X	X	X	X	X	X
IFH Chafe Guard	999601	7	X		X	X	X	X		
Pro-Gard	974	6	X		X	X	X	X		
Pro-Gard Eye Protector	973	6		X	X	X	X	X		
Pro-Moor	977	6	X		X	X	X	X		

Rope Thimbles

Please see individual product descriptions for exact sizing and specifications.

PRODUCT NAME	FAMILY CODE	PAGE	FITS ROPE DIAMETER *See product specs for exact sizes*: 1/4"–1/2"	3/4"–1"	1-1/4"–1-1/2"	1-3/4"–2"	2-1/4"–2-1/2"	2-3/4"–3"	3-1/4"–3-1/2"	3-3/4"–4"	4-1/4"–4-1/2"	4-3/4"–5"	5-1/4"–5-1/2"	5-3/4"–6"	6-1/4"–6-1/2"	6-3/4"–7"
Blue Line Thimble	930	8														
Bronze Thimble	920	9														
Galvanized HD Wire Thimble	924	9														
Galvanized Painted Thimble	929	9														
Heavy Duty Hawser Thimble	933	8														
Orkot® Thimble	963	7														

REGISTERED TRADEMARK NOTICES:

AmSteel® and DeepCool® are registered trademark of Samson Rope Technologies, Inc.
DPX™ is a trademark of Samson Rope Technologies, Inc.
Cordura® is a registered trademark of INVISTA for durable fabrics.
Orkot® is a registered trademark of Trellborg Sealing Solutions UK, Ltd.
Technora® is a registered trademark of Teijin, Ltd.
Vectran® is a registered trademark of Hoechst Celanese Corporation.
Zylon® PBO is a registered trademark of Toyobo Co., Ltd.

Dyneema® is a registered trademark of Royal DSM N.V.

Dyneema® is DSM's high-performance polyethylene product.

WITH Dyneema®

THE STRONGEST NAME IN ROPE

2090 Thornton Street
Ferndale, WA 98248

Phone: +1 800.227.7673
or +1 360.384.4669
Fax: +1 360.384.0572
SamsonRope.com

© 2011 Samson Rope Technologies, Inc.
S/WD #108321 1/2013